

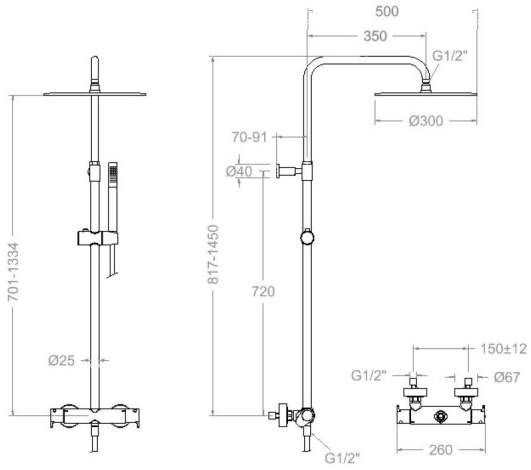

365412 RM300 CHROME (361202S+DN132D+RM300+3714+2472C)

365412RM300

Collection: Alexia
Finish: Cromo
Code: 36D308546
Location: Baño
Category: Ducha

Technical characteristics

- Thermostatic cartridge Ø34 mm.
- Diverter 2 ways with closure
- Flow rate at 3 bar (43 PSI): 12 l/min through hand shower outlet and 10 l/min through showerhead outlet.
- Thermal shock resistent and anti-Legionella chemical.
- Guarantee of 5 year for tapware and 3 years for accesories.
- Use pressure between 1-5 bar (14.5-72.5 PSI). Recomended pressure 3 bar (43 PSI).
- Resists static pressure equal to or less than 10 bar (145 PSI) and water hammer up to 25 bar.
- 3 bar (43 PSI) acoustic level less than 20 dB.
- Comfort benefits of fidelity, sensibility and constancy in temperature selection.
- Recommended temperature of use from 15°C to 55°C. Maximum use temperature 65°C. Maximum 1h at 90°C
- Minimum installation required with gas or electrical water heaters from 10 liters with 18 Kw of power.
- Quick response to temperature variations. Maximum time of 1 second.
- Thermostatic cartridge with Hot Block system for anti burn safety.
- Termostop system for blocking temperature at 38°C.
- Cooltouch system that mantains the tapware cold-temperate to the touch.

Tests

- Water tightness, flow rate, mechanical behavior under pressure, mechanical resistance, dimensional, acoustical and corrosion test according to european standardsEN 1111 and EN 248.

Composition and spare parts

Shower head:	RM300ACS (99Z304574)
Hand shower:	3714 (99Z309761)
Shower flexible hose:	2472 C (99Z305990)
Shower column:	DN132D (AAZ306723)
Joint kit:	BJDN132D (AAZ307894)
Flow limiter:	LC1212 (AAZ310503)
Eccentric:	E1/23/4FAC (261913)
Escutcheon:	1323 (220749)
Escutcheon + Eccentric:	1326NF (AAZ302187)
Seat:	AGTI02 (AAZ302211)
Screw seat:	T3/4 (160220)
Handle wheel cover:	3761 (201129)
Handle wheel:	3657 (36Z305543)
Diverter nut:	TSC354 (261914)
Thermostatic cartridge:	1703T (AAZ302240)

· Temperature limiter ring:	ALT5 (261920)
· Handle wheel temperature:	3651 (36Z300831)
· Check valve:	ARD15 (181680)
· Shower support:	SD25 (AAZ306948)
· Wall bracket:	SFT25L55 (AAZ307401)
· Tube fixing bracket:	SFDN132D (AAZ307406)
· Diverter valve:	4000 (210849)

