



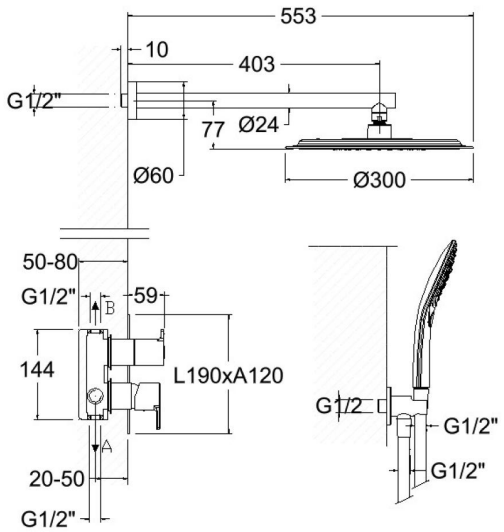

941512 RP300 CHROME CONCEALED 2 WAYS ROUND BLAUTHERM S2

941512RP300

Collection: Blautherm
Finish: Cromo
Code: 94D311106
Location: Baño
Category: Ducha empotrada

Technical characteristics

- Ceramic cartridge Ø35 mm.
- Water saving system S2 through the handle opening in two fases.
- Flow rate at 3 bar (43 PSI): 22 l/min through bath outlet and 21 l/min through shower outlet.
- Thermal shock resistent and anti-Legionella chemical.
- Guarantee of 5 year for tapware and 3 years for accesories.
- Use pressure between 1-5 bar (14.5-72.5 PSI). Recomended pressure 3 bar (43 PSI).
- Resists static pressure equal to or less than 10 bar (145 PSI) and water hammer up to 25 bar.
- 3 bar (43 PSI) acoustic level less than 20 dB.
- Comfort benefits of fidelity, sensibility and constancy in temperature selection.
- Recommended temperature of use from 15°C to 55°C. Maximum use temperature 65°C. Maximum 1h at 90°C
- Chromed surface: 15 microns thick of nickel and 0.3 microns thick of chrome.
- Termostop Block system for maximum water temperature limitation.

Tests

- Water tightness, flow rate, mechanical behavior under pressure, mechanical resistance, dimensional, acoustical and corrosion test according to european standards EN 817 and EN 248.

Composition and spare parts

Arm cover:	1346 (AAZ311609)
Handle:	9400N-35 (94Z300953)
Index:	DT1-CN (252825)
Cartridge nut cover:	4980 (252834)
Cartridge nut:	TSC351 (250863)
Cartidge:	35100 (252204)
Handle wheel cover:	3761NE (AAZ300630)
Ceramic diverter:	4004 (AAZ300972)
Wall plate:	KX2 (36C300951)
Concealed body:	XX1512 (AAZ307160)
Distributor shirt:	CEMP3504 (AAZ307192)
Diverter nut:	TSC354 (261914)
Hand shower:	4914Q3 (99Z306272)
Shower support:	3796 (227490)
Shower flexible hose:	2471 C (99Z305989)
Shower head:	RP300 (99Z303028)
Escutcheon:	F3796 (AAZ306975)
Showerhead arm:	B400 (99Z309001)
Showerhead + Showerhead arm:	BH02RP300 (99H309775)

- Handle wheel: 945100L (94Z311366)
- Cartridge shirt: CEMP3501 (AAZ302077)

