



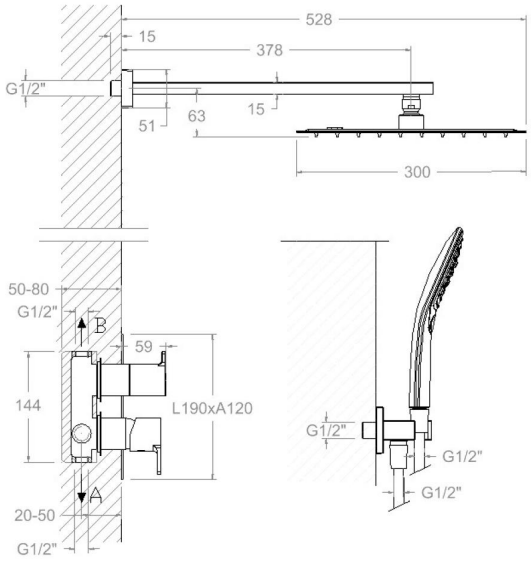

BRE941512 RK300 CHROME CONCEALED 2 WAYS SQUARED 8L BLAUTHERM S2

BRE941512RK300

Collection: Blautherm
Finish: Cromo
Code: 94D311143
Location: Baño
Category: Ducha empotrada

Technical characteristics

- Ceramic cartridge Ø35 mm.
- Water saving system S2 through the handle opening in two fases.
- Flow rate: 8 l/min (stable for the range 1.5-5.5 bar (21,8-79.8 PSI) and temperature 15-55°C)
- Thermal shock resistent and anti-Legionella chemical.
- Guarantee of 5 year for tapware and 3 years for accesories.
- Use pressure between 1-5 bar (14.5-72.5 PSI). Recomended pressure 3 bar (43 PSI).
- Resists static pressure equal to or less than 10 bar (145 PSI) and water hammer up to 25 bar.
- 3 bar (43 PSI) acoustic level less than 20 dB.
- Comfort benefits of fidelity, sensibility and constancy in temperature selection.
- Recommended temperature of use from 15°C to 55°C. Maximum use temperature 65°C. Maximum 1h at 90°C
- Chromed surface: 15 microns thick of nickel and 0.3 microns thick of chrome.
- Termostop Black system for maximum water temperature limitation.

Tests

- Water tightness, flow rate, mechanical behavior under pressure, mechanical resistance, dimensional, acoustical and corrosion test according to european standards EN 817 and EN 248.