ramonsoler.

ADAGIO

Adagio, two handle faucet with swivel spout 170mm, chromed

910101 | CODE SAP 91A306076

COLLECTION	FINISH	LOCATION	CATEGORY
Adagio	Cromo	Baño	Lavabo



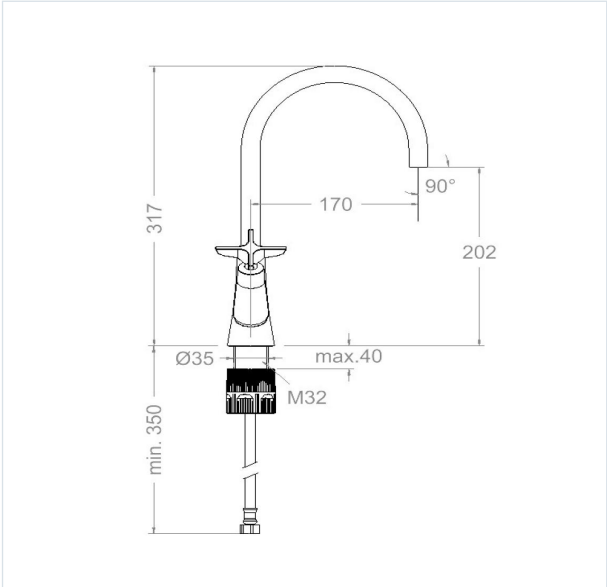

TECHNICAL CHARACTERISTICS

- Ceramic headwork G1/2 of 90°.
- Flow rate: 5 l/min (stable for the range 1.5-5.5 bar (21,8-79.8 PSI) and temperature 15-55°C)
- Thermal shock resistent and anti-Legionella chemical.
- Guarantee of 5 year for tapware and 3 years for accesories.
- Use pressure between 1-5 bar (14.5-72.5 PSI). Recomended pressure 3 bar (43 PSI).
- Resists static pressure equal to or less than 10 bar (145 PSI) and water hammer up to 25 bar.
- 3 bar (43 PSI) acoustic level less than 20 dB.
- Comfort benefits of fidelity, sensibility and constancy in temperature selection.
- Recommended temperature of use from 15°C to 55°C. Maximum use temperature 65°C. Maximum 1h at 90°C
- Chromed surface: 15 microns thick of nickel and 0.3 microns thick of chrome.

TESTS

- Water tightness, flow rate, mechanical behavior under pressure, mechanical resistance, dimensional, acoustical and corrosion test according to european standards EN 200 and EN 248.

COMPOSITION AND SPARE PARTS

Escutcheon	**9191**	91Z307086
Handle wheel	**9150**	91Z307090
Aerator	**1621**	AAZ307196
Accesory bag	**BJB01**	AAZ304485
Felxible hose	**224**	120826
Blue headwork	**1702C1/2**	AAZ306281
Red Headwork	**1701C1/2**	AAZ306280
Spout	**C9101**	91Z307104
Threaded tube	**CRF321**	AAZ308130
Wing nut	**TP3/8X2**	AAZ305358
Nut thread tube	**TCR01**	AAZ305357