

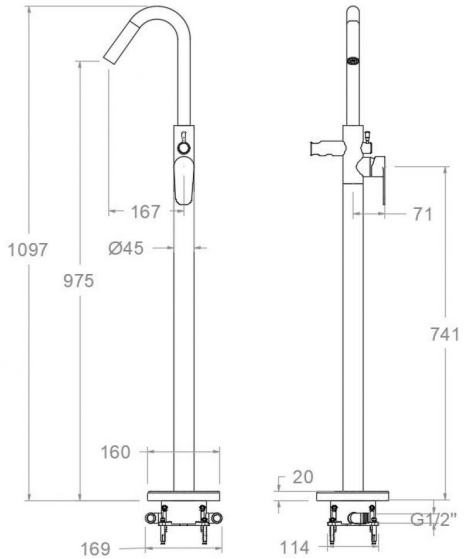

368503 SGR GRAPHITE BASE-COLUMN BATH ALEXIA

368503SGR

Collection: Alexia
Finish: Grafito
Code: 36C309084
Location: Baño
Category: Bañera

Technical characteristics

- Ceramic cartridge Ø35 mm.
- Flow rate at 3 bar (43 PSI): 17 l/min through bath outlet and 12 l/min through shower outlet.
- Thermal shock resistent and anti-Legionella chemical.
- Guarantee of 5 year for tapware and 3 years for accesories.
- Use pressure between 1-5 bar (14.5-72.5 PSI). Recomended pressure 3 bar (43 PSI).
- Resists static pressure equal to or less than 10 bar (145 PSI) and water hammer up to 25 bar.
- 3 bar (43 PSI) acoustic level less than 20 dB.
- Comfort benefits of fidelity, sensibility and constancy in temperature selection.
- Recommended temperature of use from 15°C to 55°C. Maximum use temperature 65°C. Maximum 1h at 90°C

Tests

- Water tightness, flow rate, mechanical behavior under pressure, mechanical resistance, dimensional, acoustical and corrosion test according to european standards EN 817 and EN 248.

Composition and spare parts

Handle:	3600-35GR (36Z309799)
Index:	DT1-GRN (AAZ311084)
Cartridge nut cover:	COMC04GR (AAZ313595)
Cartridge nut:	TSCMC03 (AAZ305775)
Cartidge:	35100-2 (AAZ300973)
Check valve:	ARDMC14 (AAZ305816)
Handle wheel:	VDMC01GR (AAZ313604)
Ceramic diverter:	DIMC01 (AAZ305815)
Base:	BEMC03GR (AAZ313600)
Concealed body:	TECNOBOX02 (AAZ305292)
Spout:	C8503RGR (AAZ313594)
Aerator:	1614 (AAZ305748)
Rigid connection spout:	CRMC06 (AAZ313681)
Shower support:	SDMC01GR (AAZ313608)