ramonsoler.

AC. BAÑO

SOP02 CHROME HOLDER WITH PLATE

SOP02 | CODE SAP 99Z306209

COLLECTION	FINISH	LOCATION	CATEGORY
Ac. baño	Cromo	Baño	



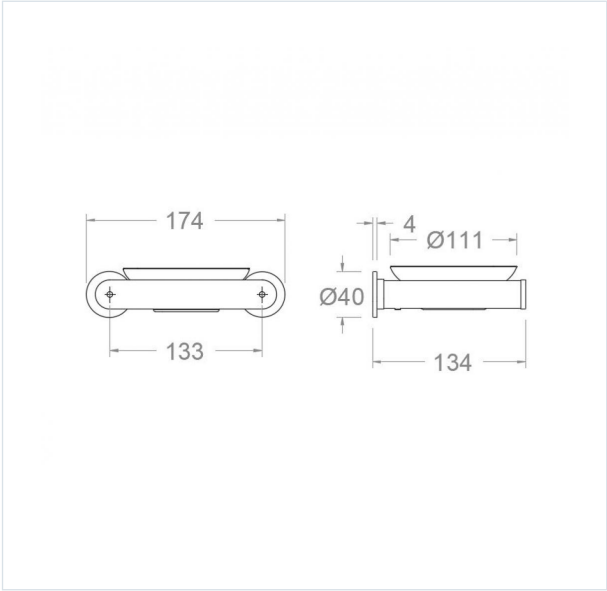

TECHNICAL CHARACTERISTICS

- Guarantee of 3 years for accesories.

TESTS

- Corrosion test according to european standard EN 248.

COMPOSITION AND SPARE PARTS

Base	**BFA02X1**	AAZ307517
Soap dish plate	**PLATO01**	AAZ307463

rsramonsoler.com · C/ Vallespir, 26 Pol. Ind. Fontsanta, 08970 Sant Joan Despí · Barcelona