ramonsoler.

ERGOS

ESTA01 CHROME TOILET SHELF 300MM

ESTA01 | CODE SAP 99Z308819

COLLECTION	FINISH	LOCATION	CATEGORY
Ergos	Cromo	Baño	



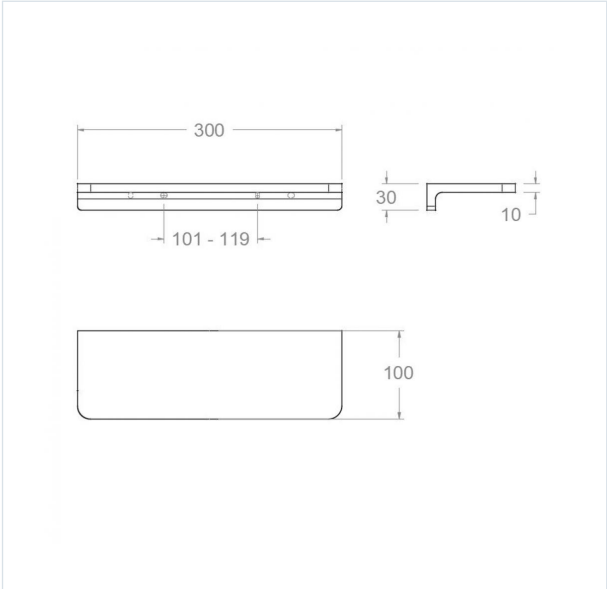

TECHNICAL CHARACTERISTICS

- Guarantee of 3 years for accesories.
- Chromed surface: 15 microns thick of nickel and 0.3 microns thick of chrome.

TESTS

- Corrosion test according to european standard EN 248.