ramonsoler.

ERGOS

PORT02 CROMO PORTA-ROLLOS DOBLE VERTICAL WC

PORT02 | CODE SAP 99Z310924

COLLECTION	FINISH	LOCATION	CATEGORY
Ergos	Cromo	Baño	



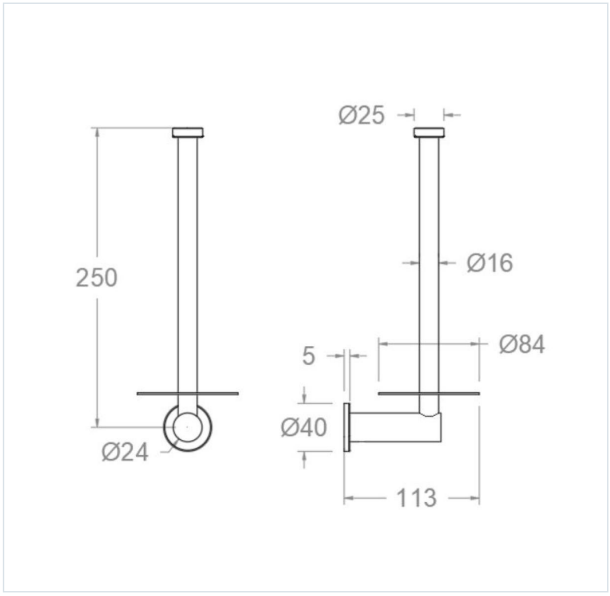

TECHNICAL CHARACTERISTICS

- Guarantee of 3 years for accesories.
- Chromed surface: 15 microns thick of nickel and 0.3 microns thick of chrome.

TESTS

- Corrosion test according to european standard EN 248.

COMPOSITION AND SPARE PARTS

Fixation bag	**BFA04X1**	AAZ313697